REVISIONS					
REV	ECN#	DESCRIPTION	REV.BY	APPR.BY	DATE
A	- -	Initial release	W.FS	M.D	2020/4/16

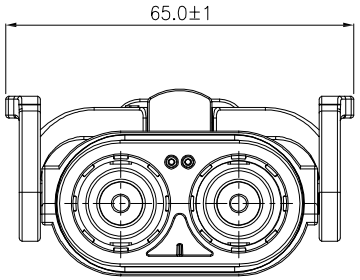

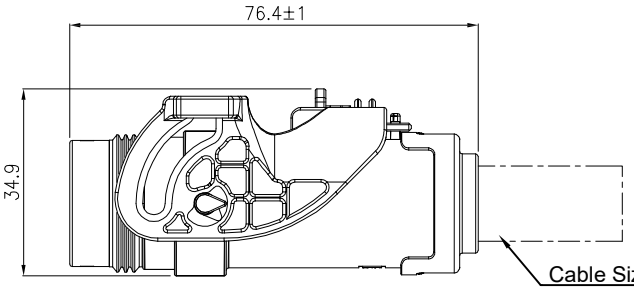

Cable Size
16 mm² 0D:10.7~11.7mm
25mm² 0D:13.0~14.0mm

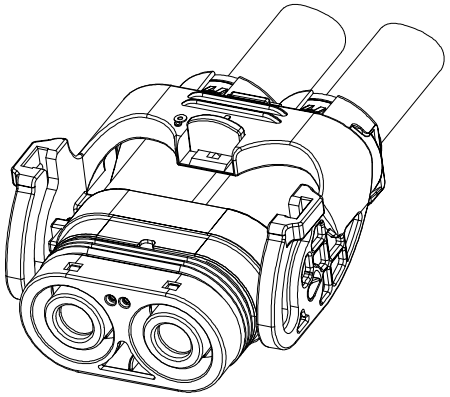

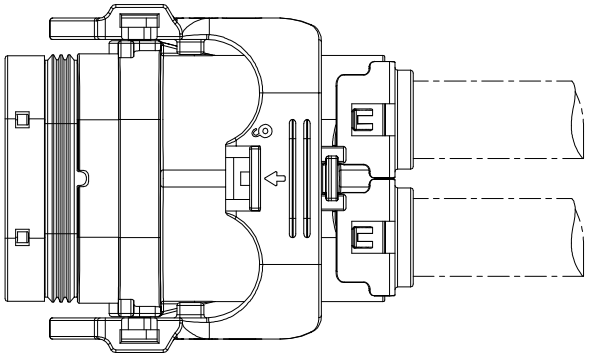

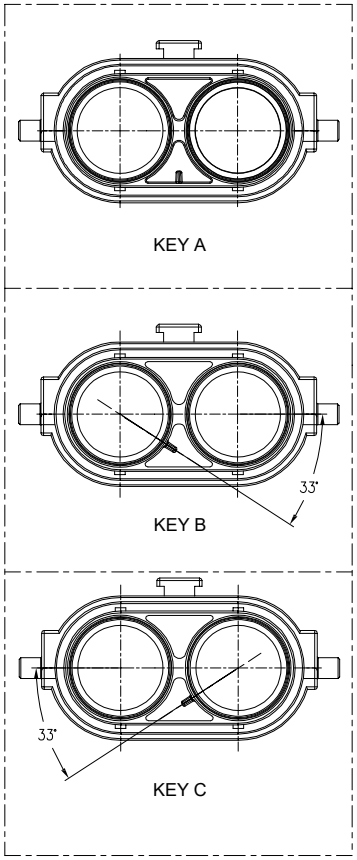

Ordering Information

BMC182 X-12 X- XX

A=Key A	0=No HVIL	16= 16 mm² Cable
B=Key B	1=HVIL	25= 25 mm² Cable
C=Key C		

Technical Specifications:
1.Operating Temperature:-40°C-+125°C
2.Insulation Resistance:＞200MΩ at DC 1000V
3.Dielectric Withstanding Voltage: AC 3000V
4.Current Rating:120A(Max)
5.Protection Class: IP67
6.ROHS

BALE		Sichuan Bale Electrical Equipment Co. Ltd			
		WEIGHT	MATERIAL: /		PART NAME: BMC120 Two-Core Straight Plug
SIGNATURE		DATE	SHEET	No tolerance(mm):	CUST P/N: /
DRAWN	W.FS		1/1	x.: ±1.0 x..: ±0.5 x...: ±0.2	
CHECKED	M.D		PROJECTION	Angle: ±2°	DWG NO: BMC182X-12X-XX
APPROVAL	M.D				

THE COPYRIGHT BELONGS TO BALE